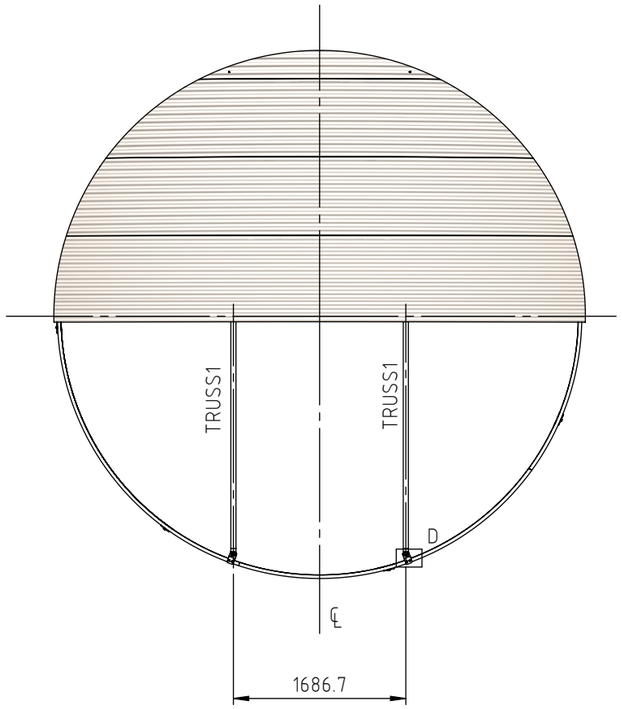

ASL44 - PLAN VIEW

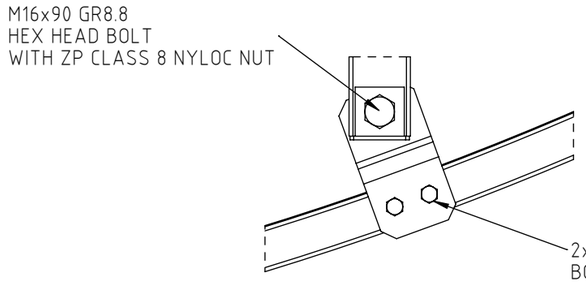

DETAIL D
TRUSS CONNECTION TO TOP RING
PLAN VIEW
1 : 5

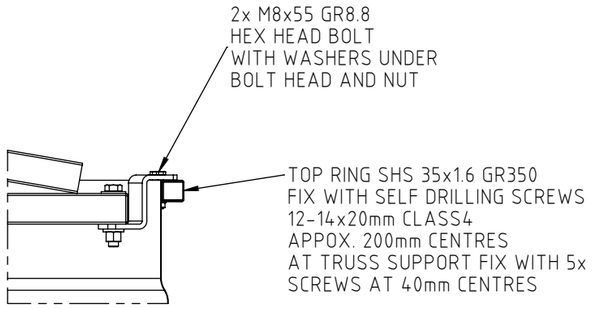

TYPICAL TRUSS RING CONNECTION DETAIL
1 : 10

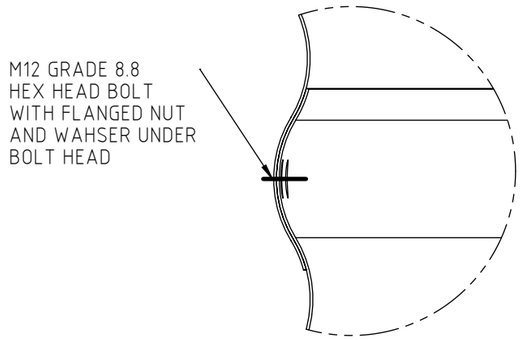

DETAIL B
SECOND RING WALL CONNECTION
1 : 2

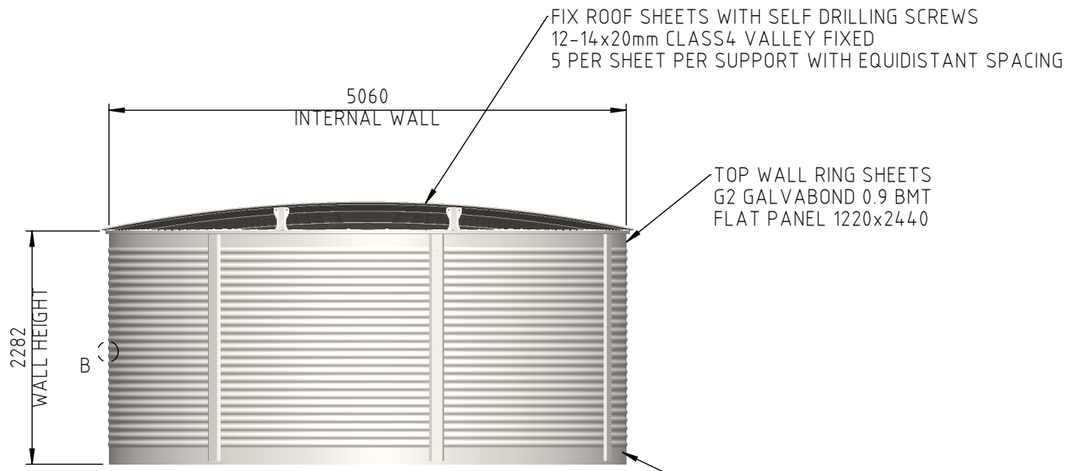

ASL44 - FRONT ELEVATION

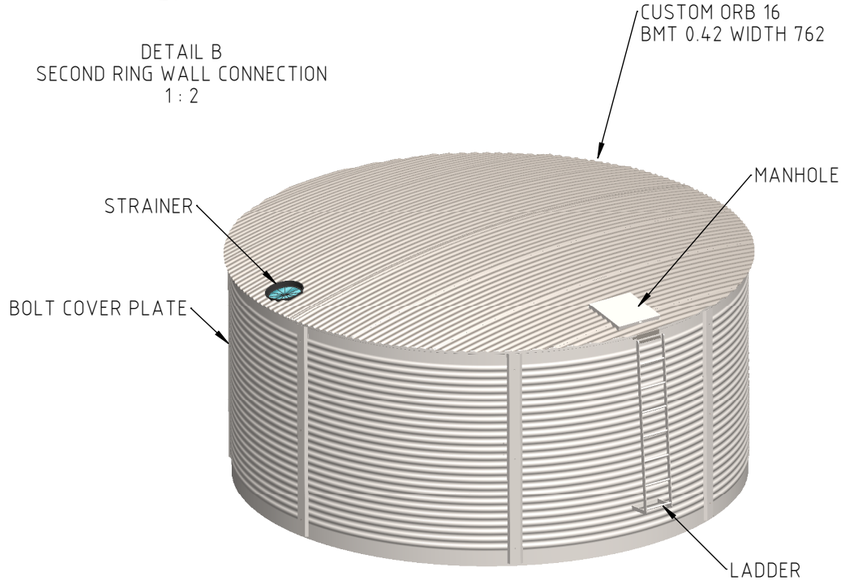

DIMETRIC VIEW
COMPLETE ASSEMBLY SHOWING MANHOLE, STRAINER AND LADDER

NOTES: DESIGNED WATER HEIGHT: 2.25m

REV	DATE	DESCRIPTION	DRAWN	APPROVED
A	21/04/17	RELEASED FOR PRODUCTION	T.P.	A.R.
P1	18/04/17	INITIAL RELEASE	T.P.	A.R.

CLIENT: BUSHMANS GROUP PTY LTD
BUSHMANS HEAD OFFICE
GPO 4218, NSW, SYDNEY, 2001
WWW.BUSHMANTANKS.COM.AU

IF THIS BAR DOES NOT MEASURE 20mm THEN DRAWING IS NOT TO SCALE
0 5 10 20

ALL DIMENSIONS IN MILLIMITRES UNLESS OTHERWISE STATED

evoco engineering
Level 20, Tower A, The Zenith,
821 Pacific Hwy, Chatswood,
NSW, 2067,AUSTRALIA
office@evocoengineering.com
evocoengineering.com

APPROVED:	S Nagy
CHECKED:	A Romero
DESIGNED:	T Pisko
DRAWN:	T Pisko
SCALE:	N.T.S.
PROJECT №:	ASL44
DRAWING №:	ASL44-D003
SHEET:	1/2
PROJECT:	AQUALINE TANK ASL44
TITLE:	SALES DRAWING GENERAL ARRANGEMENT
ORIG. SIZE:	A3
REV.:	A
DRAWING SET №:	

PRINT DATE: Sunday, 23 April 2017

THIS DESIGN AND DRAWING IS THE SOLE PROPERTY OF EVOCO ENGINEERING PTY LTD. ANY COPY, REPRODUCTION, MODIFICATION AND/OR TRANSMITTAL OF ANY INFORMATION CONTAINED WITHIN THIS DRAWING MAY ONLY OCCURE WITH THE WRITTEN PERMISSION OF THE COMPANY.

C:\Users\Tomas7710\Dropbox\EVOCO Engineering Pty Ltd\Projects\Bushmans Group\Aqualine Steel Tanks\ASL44\

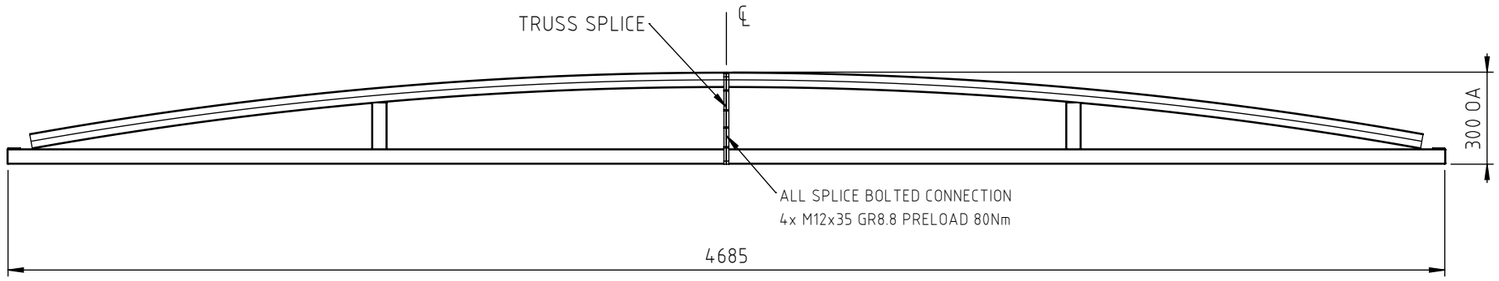

ASL44 TRUSS 1 ELEVATION
SCALE 1 : 20
2 OFF REQUIRED
CALCULATED MASS: 27.5 KG

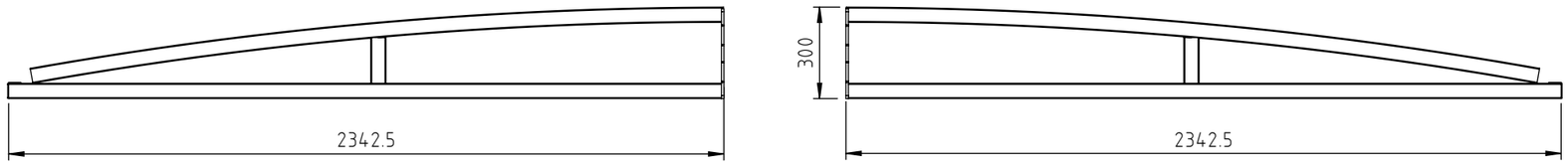

ASL44 TRUSS 1 EXPLODED VIEW
SCALE 1 : 20

REV	DATE	DESCRIPTION	DRAWN	APPROVED
A	21/04/17	RELEASED FOR PRODUCTION	T.P.	A.R.
P1	18/04/17	INITIAL RELEASE	T.P.	A.R.

CLIENT: BUSHMANS GROUP PTY LTD
Bushmans
BUSHMANS HEAD OFFICE
GPO 4218, NSW, SYDNEY, 2001
WWW.BUSHMANTANKS.COM.AU

IF THIS BAR DOES NOT MEASURE 20mm THEN DRAWING IS NOT TO SCALE
0 5 10 20

ALL DIMENSIONS IN MILLIMITRES UNLESS OTHERWISE STATED

evoco engineering
Level 20, Tower A, The Zenith,
821 Pacific Hwy, Chatswood,
NSW, 2067,AUSTRALIA
office@evocoengineering.com
evocoengineering.com

APPROVED:	S Nagy
CHECKED:	A Romero
DESIGNED:	T Pisko
DRAWN:	T Pisko
SCALE:	N.T.S.
PROJECT №:	ASL44
DRAWING №:	ASL44-D003
SHEET:	2/2
PROJECT:	AQUALINE TANK ASL44
TITLE:	SALES DRAWING TRUSS ARRANGEMENT
ORIG. SIZE:	A3
REV.:	A
DRAWING SET №	

PRINT DATE: Sunday, 23 April 2017

THIS DESIGN AND DRAWING IS THE SOLE PROPERTY OF EVOCO ENGINEERING PTY LTD. ANY COPY, REPRODUCTION, MODIFICATION AND/OR TRANSMITTAL OF ANY INFORMATION CONTAINED WITHIN THIS DRAWING MAY ONLY OCCURE WITH THE WRITTEN PERMISSION OF THE COMPANY.

C:\Users\Tomas7710\Dropbox\EVOCO Engineering Pty Ltd\Projects\Bushmans Group\Aqualine Steel Tanks\ASL44\