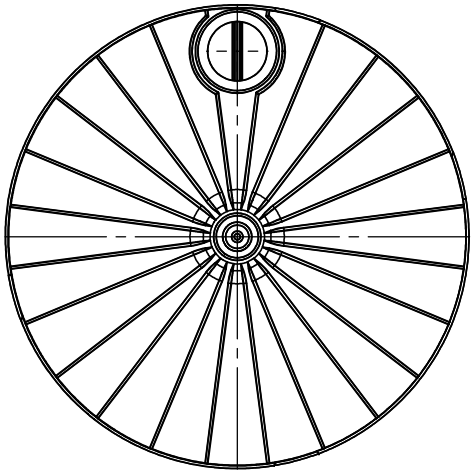

TOP VIEW

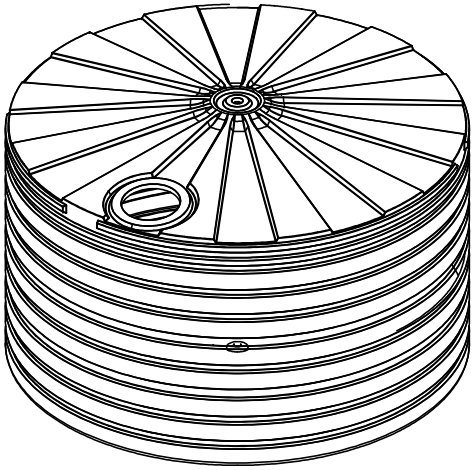

3D VIEW

ACCESSORIES LIST

ITEM	QTY.	SIZE	DESCRIPTION

HEIGHT (mm)	WIDTH (mm)	VOLUME (ltr)

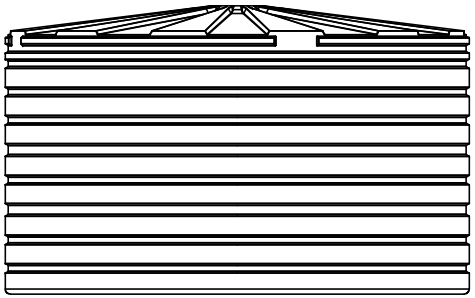

REAR VIEW

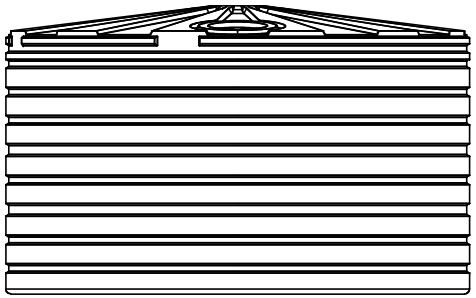

FRONT VIEW

TANK MODEL REQUIRED:	

BUSHMANS INDUSTRIAL

3 HEALEY CIRCUIT, HUNTINGWOOD, NSW 2148.

Ph 02 888 44 111 Fax 02 8814 8841 WWW.BUSHMANTANKS.COM

Copyright 2006 Bushmans Group Pty Ltd. This drawing may not be reproduced or transmitted in any form or by any means in part or whole without written permission of Bushmans Group Pty Ltd.

Drawn	N.LABROSSE
Date	11-12-2006
Scale	1:33
Project Title	TS5000 SQUAT TANK
Material	LDPE 711 UV
Finish	

Drawing Title

LARGE GENERIC SQUAT TANK SCHEMATIC

A3 Size Drawing

Sheet 1 of 1