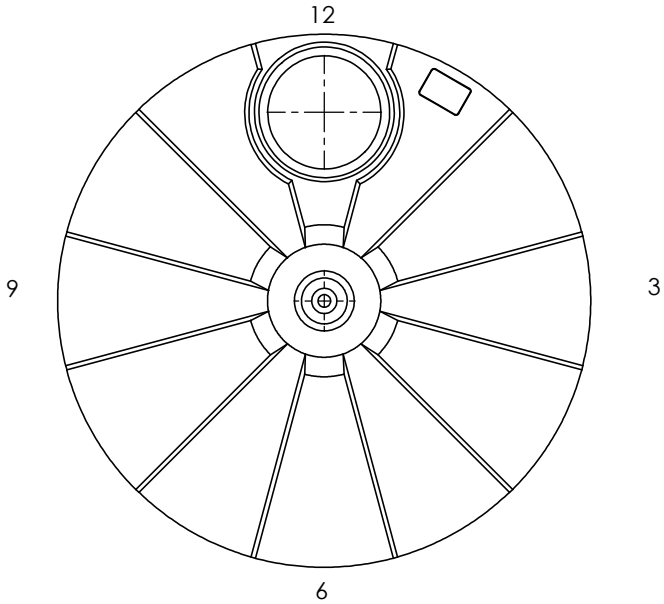

TOP VIEW

ACCESSORIES LIST

ITEM	SIZE	DETAIL	DESCRIPTION	RADIAL DEGREE	HEIGHT FROM BASE

HEIGHT (mm)	WIDTH (mm)	VOLUME (ltr)
1370	2150	4,200

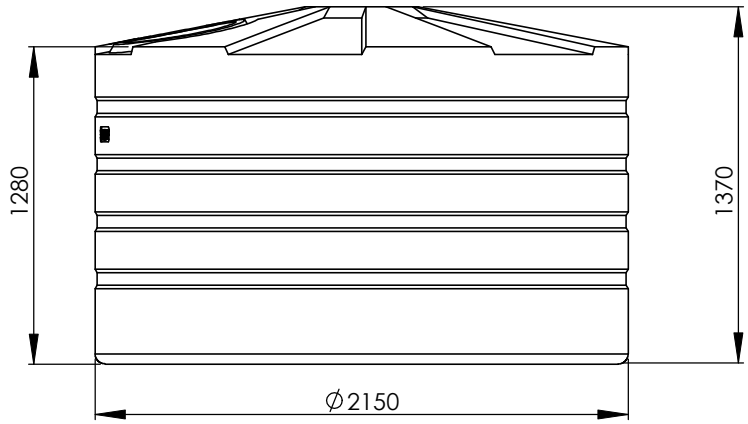

REAR VIEW

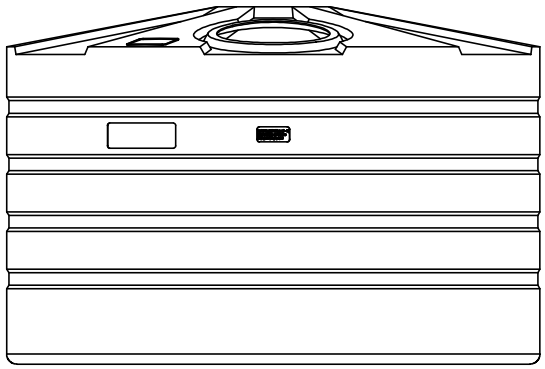

FRONT VIEW

Bushmans

BUSHMANS INDUSTRIAL

LEVEL 13, 300 GEORGE ST, SYDNEY, NSW 2000

Ph 1800 00 88 88 Ph 02 8224 5802 WWW.BUSHMANTANKS.COM.AU

Copyright 2010 Bushmans Group Pty Ltd. This drawing may not be reproduced or transmitted in any form or by any means in part or whole without written permission of Bushmans Group Pty Ltd.

Drawn	I Hansen
Date	21-07-2010
Scale	1:33
Project Title	Industrial Tank Schematic
Material	LLDPE
Finish	
Drawing Title	Industrial Grade TS910 4,200 Schematic

A3 Size Drawing

Sheet 1 of 1